PROPERTY OF ISLANDAIRE UNAUTHORIZED USE PROHIBITED

EZ SERIES UN DIMENSIONAL SHEET

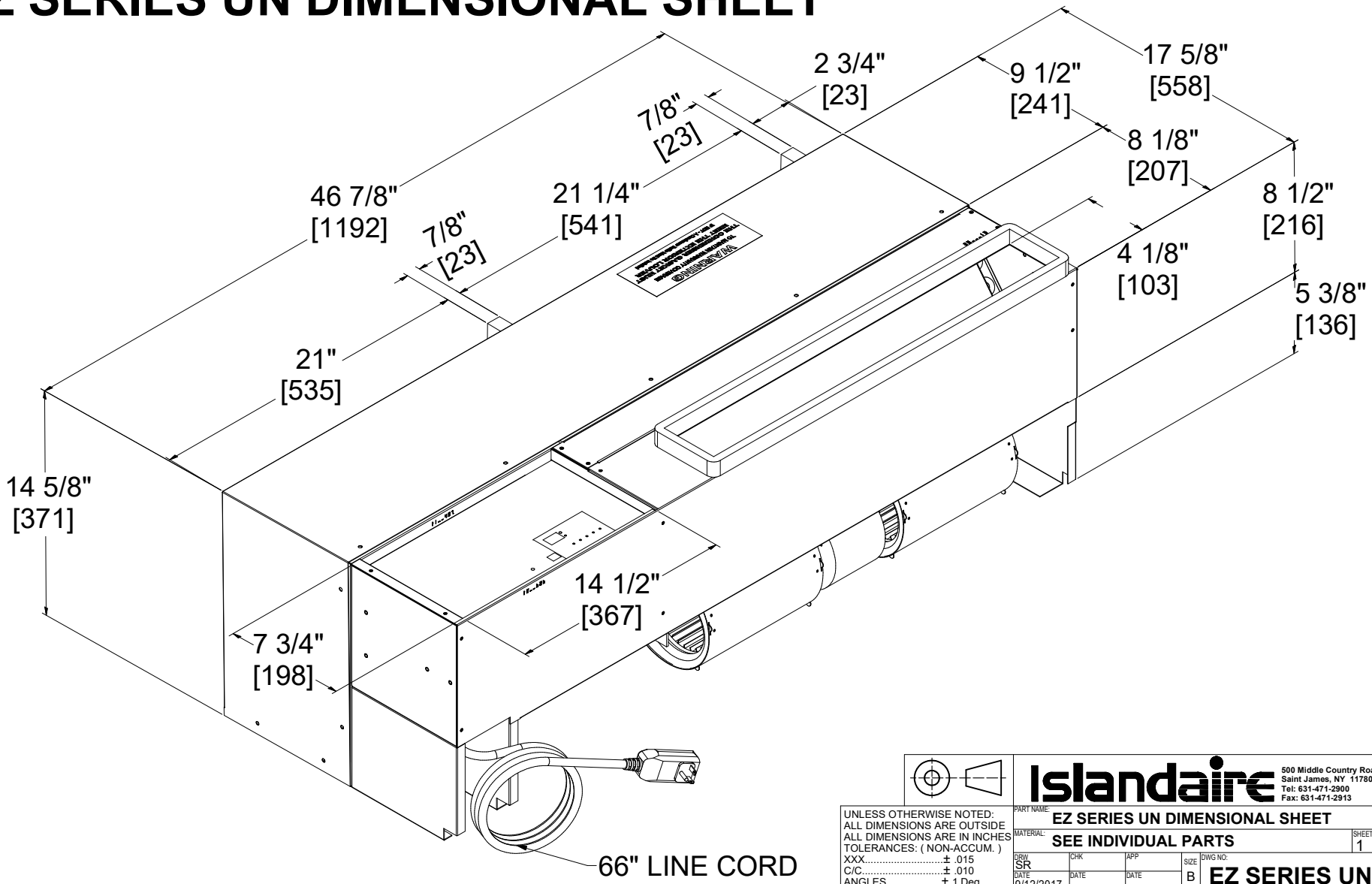

UNLESS OTHERWISE NOTED:
ALL DIMENSIONS ARE OUTSIDE
ALL DIMENSIONS ARE IN INCHES
TOLERANCES: (NON-ACCUM.)
XXX.....± .015
C/C.....± .010
ANGLES.....± 1 Deg

Islandaire
500 Middle Country Road
Saint James, NY 11780
Tel: 631-471-2900
Fax: 631-471-2913

PART NAME: EZ SERIES UN DIMENSIONAL SHEET					
MATERIAL: SEE INDIVIDUAL PARTS					SHEET: 1 OF 1
DRW: SR	CHK	APP	SIZE: B	DWG NO: EZ SERIES UN	REV: -
DATE: 9/12/2017	DATE	DATE			

PROPERTY OF ISLANDAIRE UNAUTHORIZED USE PROHIBITED