PROPERTY OF ISLANDAIRE UNAUTHORIZED USE PROHIBITED

EZMB SERIES DIMENSIONAL SHEET

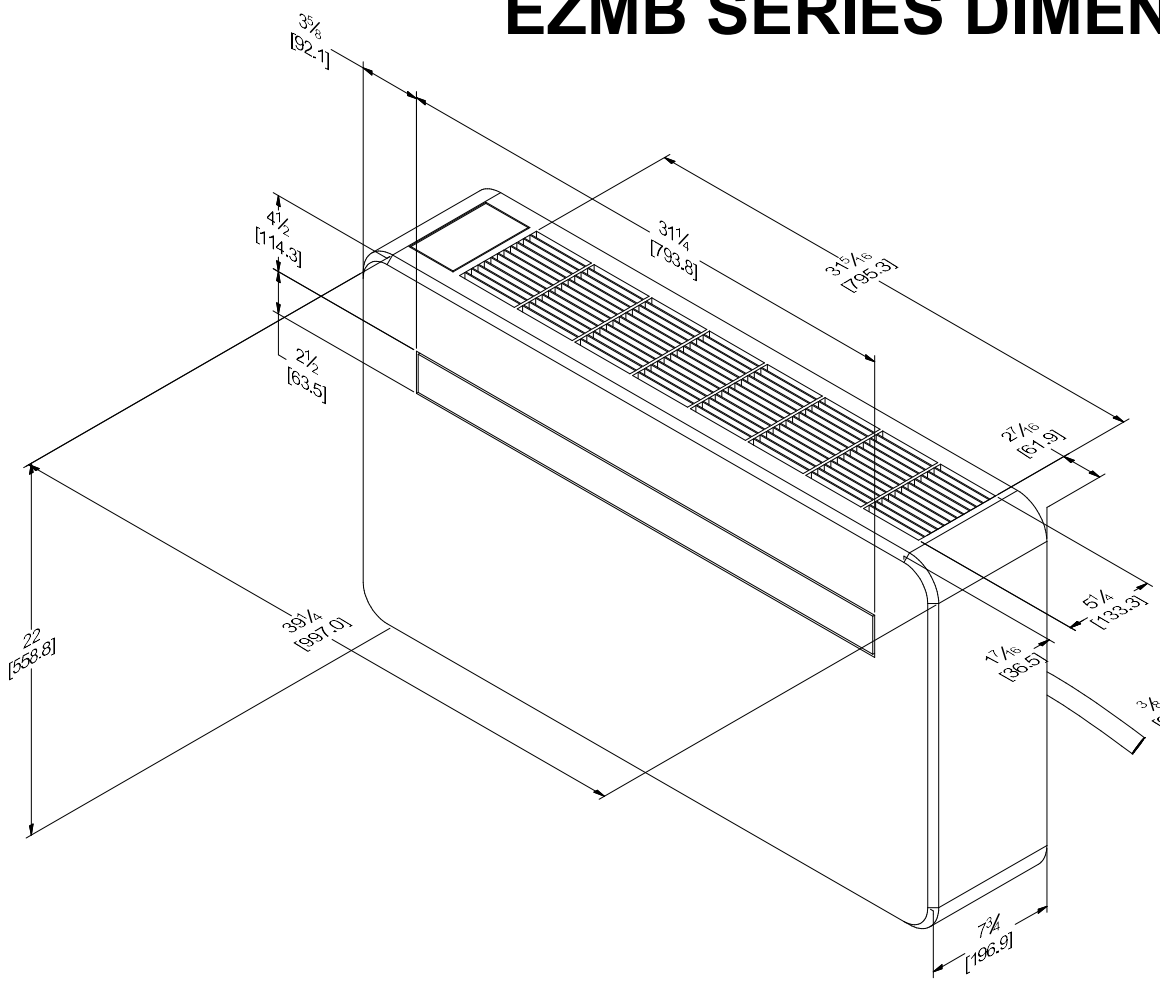

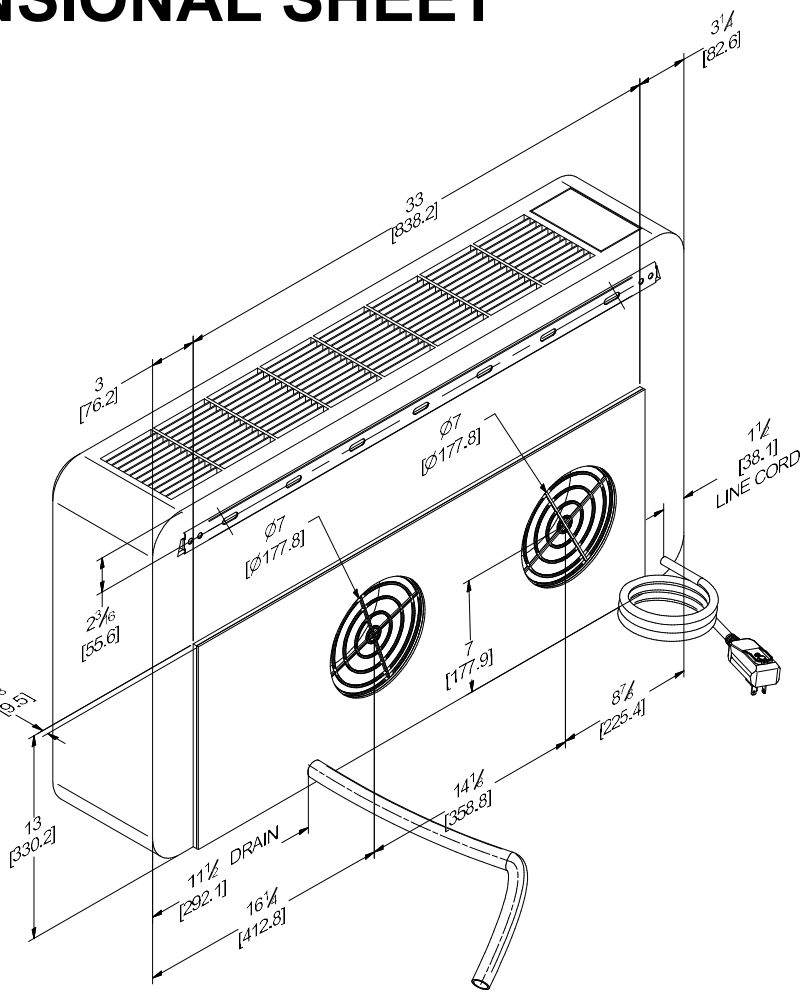

Islandaire
500 Middle Country Road
Saint James, NY 11780
Tel: 631-471-2900
Fax: 631-471-2913

UNLESS OTHERWISE NOTED:
ALL DIMENSIONS ARE OUTSIDE
ALL DIMENSIONS ARE IN INCHES
TOLERANCES: (NON-ACCUM.)
XXX.....± .015
C/C.....± .010
ANGLES.....± 1 Deg

PART NAME: EZMB SERIES DIMENSIONAL SHEET					
MATERIAL: SEE INDIVIDUAL PARTS					SHEET: 1 OF 3
DRW: DHartough	CHK	APP	SIZE	DWG NO:	REV
DATE: 7/10/2024	DATE	DATE	B	EZMB SERIES	-

PATH: C:\Engg\Designs\MB\MB UNIT.iam

PROPERTY OF ISLANDAIRE UNAUTHORIZED USE PROHIBITED