PROPERTY OF ISLANDAIRE UNAUTHORIZED USE PROHIBITED

EZ SERIES NU DIMENSIONAL SHEET

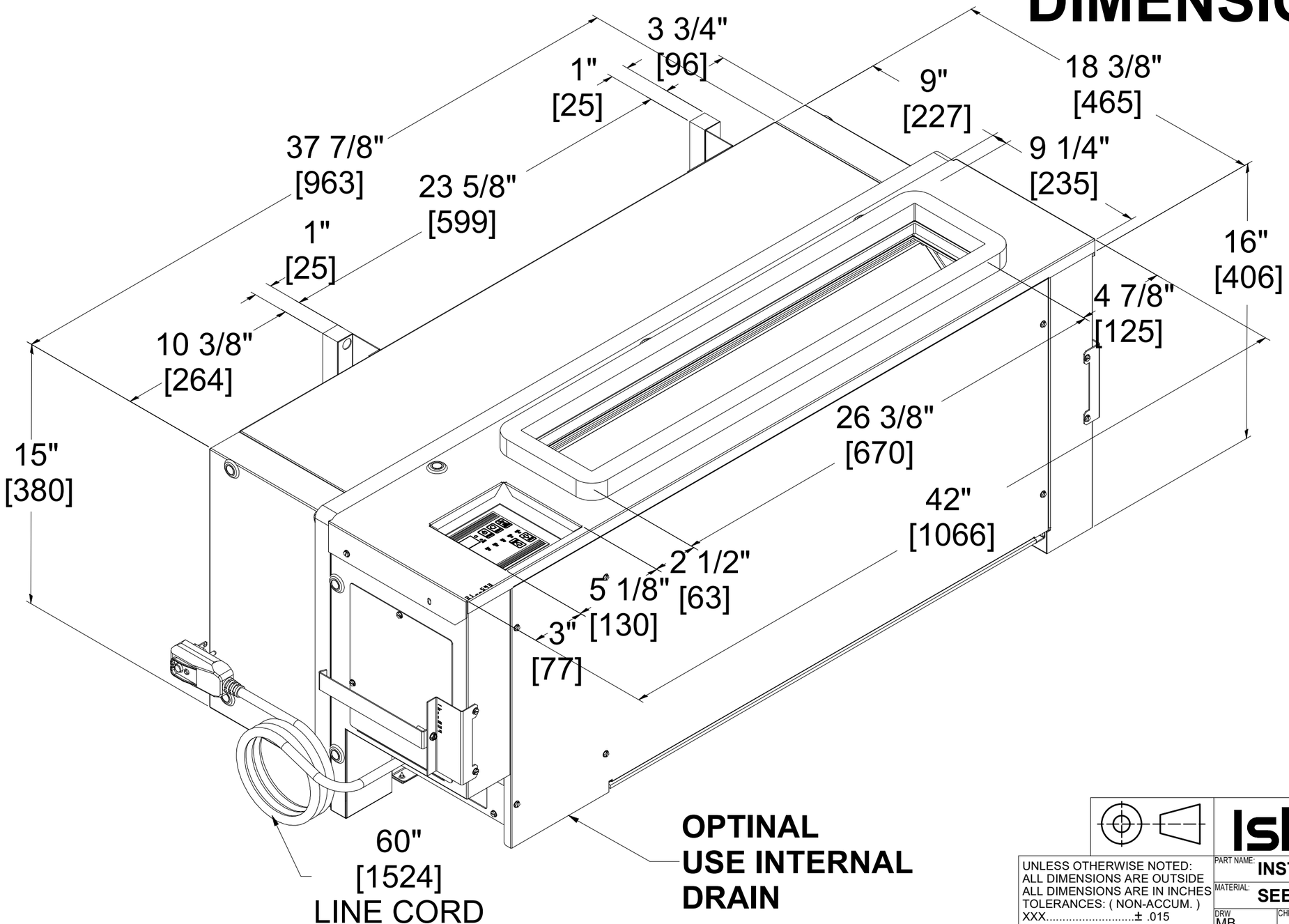

PATH: C:\Engg\Designs\EZNU\ASSEMBLIES\EZRM TO EZNU CONV..iam

UNLESS OTHERWISE NOTED:
ALL DIMENSIONS ARE OUTSIDE
ALL DIMENSIONS ARE IN INCHES
TOLERANCES: (NON-ACCUM.)
XXX.....± .015
C/C.....± .010
ANGLES.....± 1 Deg

Islandaire
500 Middle Country Road
Saint James, NY 11780
Tel: 631-471-2900
Fax: 631-471-2913

PART NAME: INSTRUCTIONS,EZRM TO EZNU,6AA					
MATERIAL: SEE INDIVIDUAL PARTS					SHEET: 1 OF 1
DRW MB	CHK	APP	SIZE B	DWG NO: 6140502	REV A
DATE 3/31/2023	DATE	DATE			

PROPERTY OF ISLANDAIRE UNAUTHORIZED USE PROHIBITED