PROPERTY OF ISLANDAIRE UNAUTHORIZED USE PROHIBITED

EZ SERIES JA DIMENSIONAL SHEET

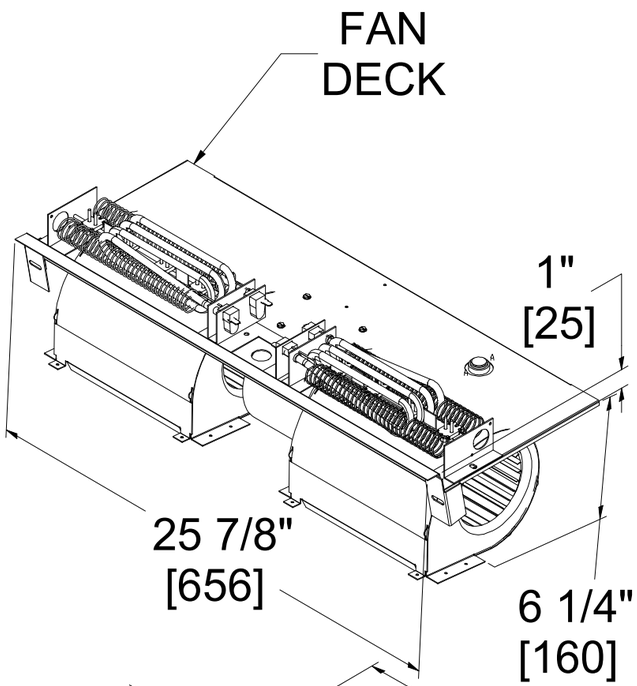

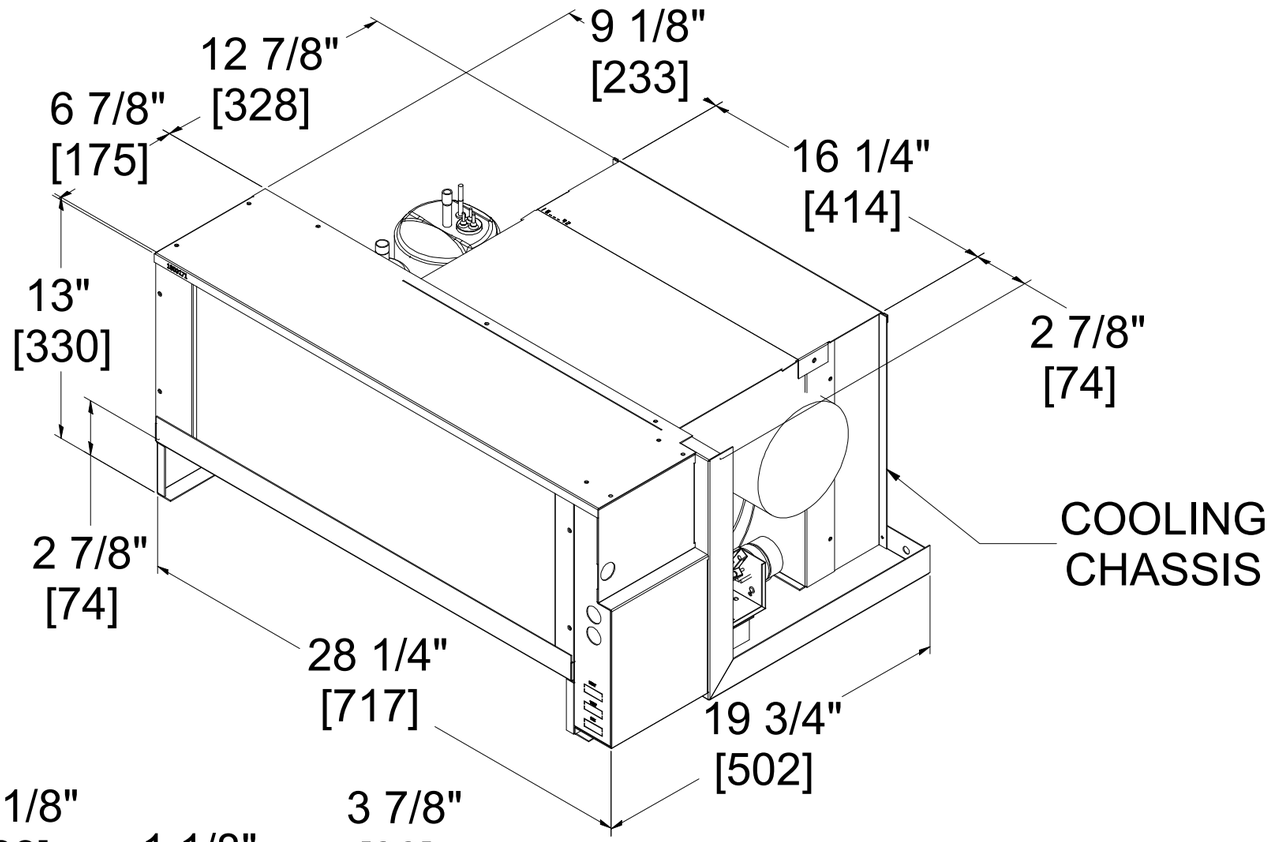

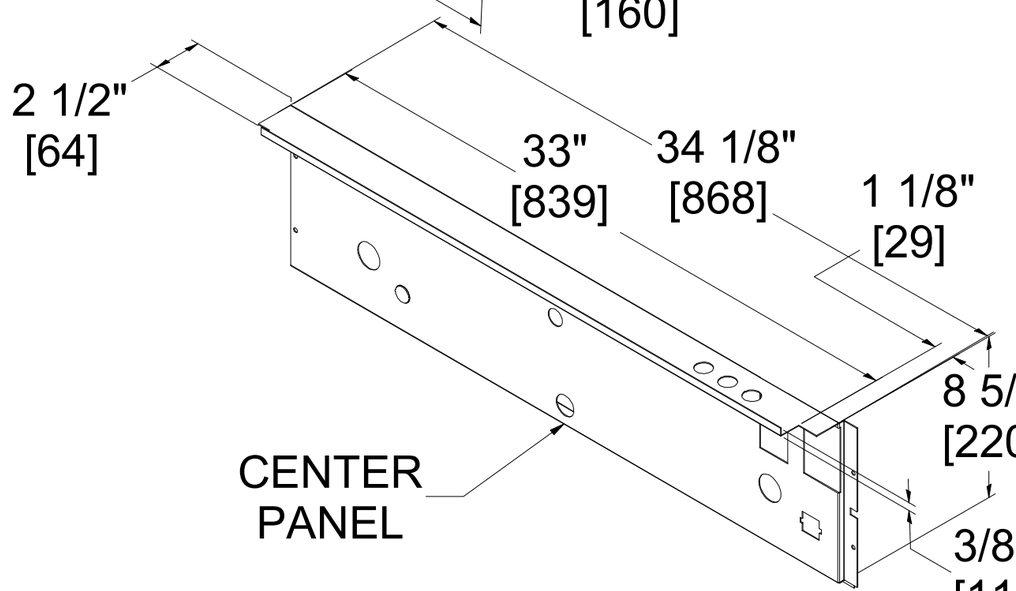

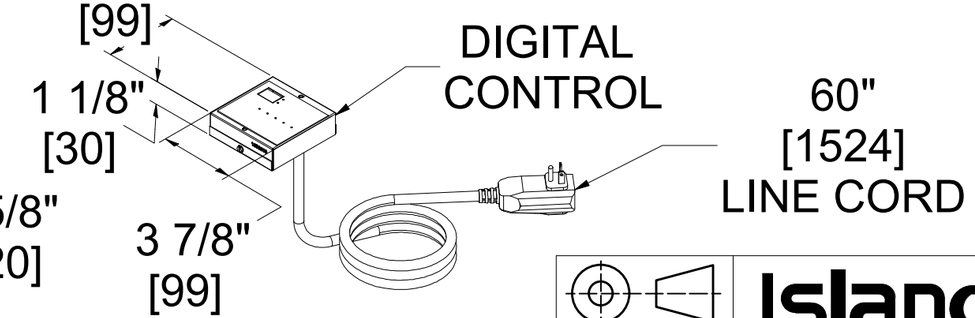

PATH: C:\Engg\Designs\JA\Assemblies\JA UNIT.iam

UNLESS OTHERWISE NOTED:
ALL DIMENSIONS ARE OUTSIDE
ALL DIMENSIONS ARE IN INCHES
TOLERANCES: (NON-ACCUM.)
XXX.....± .015
C/C.....± .010
ANGLES.....± 1 Deg

Islandaire
500 Middle Country Road
Saint James, NY 11780
Tel: 631-471-2900
Fax: 631-471-2913

PART NAME: EZ SERIES JA DIMENSIONAL SHEET					
MATERIAL:					SHEET: 1 OF 1
DRW BOB B	CHK	APP	SIZE B	DWG NO: JA UNIT	REV -
DATE 5/7/2010	DATE	DATE			

PROPERTY OF ISLANDAIRE UNAUTHORIZED USE PROHIBITED